Sportplatz

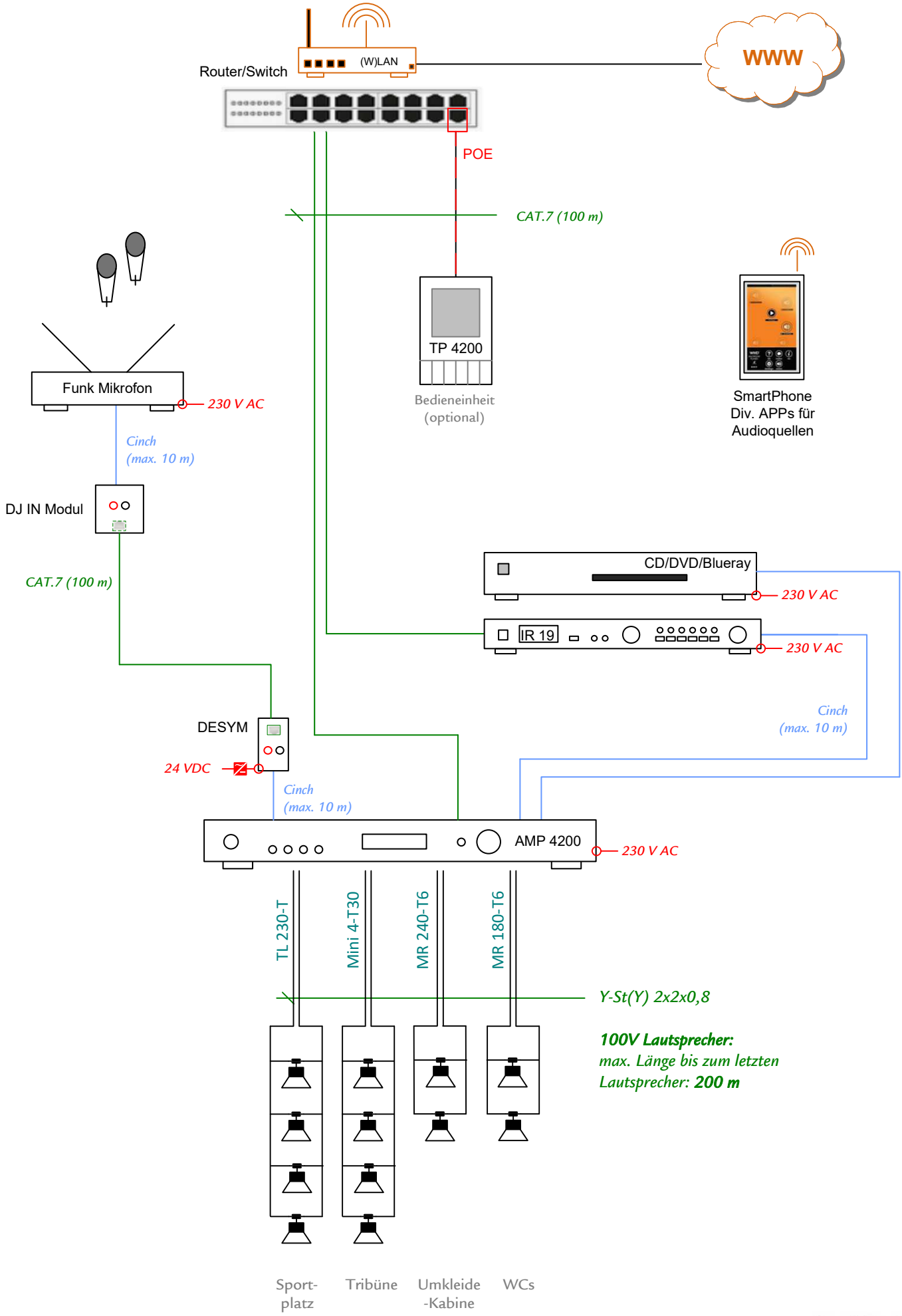

WHD
SOUNDS GOOD